OPERATOR'S MANUAL PX30R-XXX-XXX-CXXX

INCLUDING: OPERATION, INSTALLATION AND MAINTENANCE

RELEASED: 2-4-05
REVISED: 11-22-19
(REV: P)

3" DIAPHRAGM PUMP

1:1 RATIO (METALLIC)

READ THIS MANUAL CAREFULLY BEFORE INSTALLING, OPERATING OR SERVICING THIS EQUIPMENT.

It is the responsibility of the employer to place this information in the hands of the operator. Keep for future reference.

SERVICE KITS

Refer to Model Description Chart to match the pump material options.
637303-XXX for Fluid Section repair **with** seats (see page 5).
637303-XX for Fluid Section repair **without** seats (see page 5).
NOTE: This kit also contains several air motor seals which will need to be replaced.
637369 for Air Section repair (see page 7).
637374-X Major Air Valve assembly (see page 8).

PUMP DATA

Models ..... see Model Description Chart for "-XXX"
Pump Type ..... Metallic Air Operated Double Diaphragm
Material ..... see Model Description Chart
Weight .. PX30R-XCX-XXX-CXXX ..... 221.1 lbs (100.3 kgs)
PX30R-ASX-XXX-CXXX, -BSX .. 228.8 lbs (103.8 kgs)
PD30R-FSX-XXX-CXXX, -DSX .. 245.6 lbs (111.4 kgs)
Maximum Air Inlet Pressure ..... 120 psig (8.3 bar)
Maximum Material Inlet Pressure ..... 10 psig (0.69 bar)
Maximum Outlet Pressure ..... 120 psig (8.3 bar)
Maximum Flow Rate ..... 237 gpm (897 lpm)
flooded inlet ..... 275 gpm (1041 lpm)
Displacement / Cycle @ 100 psig ..... 2.8 gal. (10.6 lit.)
Maximum Particle Size ..... 3/8" dia. (9.5 mm)
Maximum Temperature Limits (diaphragm / ball / seat material)
E.P.R. / EPDM ..... -60° to 280° F (-51° to 138° C)
Hytrel® ..... -20° to 180° F (-29° to 82° C)
Kynar® PVDF ..... 10° to 200° F (-12° to 93° C)
Nitrile ..... 10° to 180° F (-12° to 82° C)
Polypropylene ..... 32° to 175° F (0° to 79° C)
Santoprene® ..... -40° to 225° F (-40° to 107° C)
PTFE ..... 40° to 225° F (4° to 107° C)
Viton® ..... -40° to 350° F (-40° to 177° C)
Dimensional Data ..... see page 9
Mounting Dimensions .. 10-5/32" x 12-1/16" (258 mm x 306 mm)
Noise Level @ 70 psig, 50 cpm① ..... 83.0 dB(A)②

① Tested with 67263 muffler assembly installed.
② The pump sound pressure levels published here have been updated to an Equivalent Continuous Sound Level (L_{Aeq}) to meet the intent of ANSI S1.13-1971, CAGI-PNEUROP S5.1 using four microphone locations.

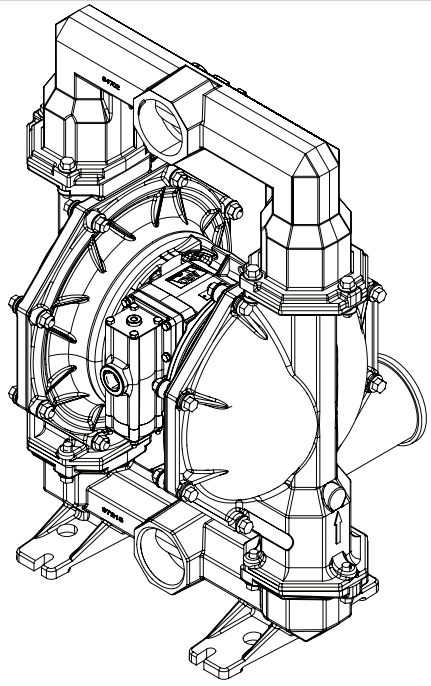

MODEL PD30R

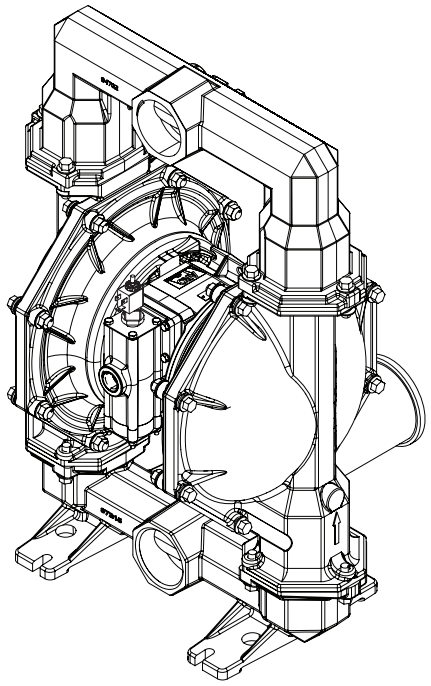

MODEL PE30R

Figure 1

INGERSOLL RAND COMPANY LTD
209 NORTH MAIN STREET – BRYAN, OHIO 43506
(800) 495-0276 • FAX (800) 892-6276
arozone.com
© 2019
CCN 15227655

ARO Ingersoll Rand

MODEL DESCRIPTION CHART

Model Code Explanation

Example: **PX30 R - X X X - X X X - C X X X**

Model Series

PD30- Standard Pump
PE30- Electronic Interface

Air Motor / Air Cap Material

R - Polypropylene / Stainless Steel

Fluid Connection

A - 3 - 8 NPTF - 1
B - Rp 3 (3 - 11 BSP Parallel)
D - 3" ANSI Flange (4-holes)
F - 3" DIN Flange (8-holes)

Fluid Caps and Manifold Material

C - Cast Iron
S - Stainless Steel

Hardware Material

P - Carbon Steel
S - Stainless Steel

Seat Material

A - Santoprene
C - Hytrel
E - Carbon Steel
F - Aluminum
G - Nitrile
H - Hard 440 Stainless Steel
K - Kynar PVDF
L - Hastelloy - C
S - 316 Stainless Steel

Ball Material

A - Santoprene
C - Hytrel
G - Nitrile
T - PTFE
V - Viton

Diaphragm Material

A - Santoprene
B - Santoprene (Backer)
C - Hytrel
G - Nitrile
L - Long Life PTFE
T - PTFE / Santoprene
V - Viton

Revision

C - Revision

Specialty Code 1 (Blank if no Speciality Code)

A - Solenoid 120 VAC,110 VAC AND 60 VDC
B - Solenoid 12 VDC, 24 VAC AND 22 VAC
C - Solenoid 240 VAC, 220 VAC AND 120 VDC
D - Solenoid 24 VDC, 48 VAC AND 44 VAC
E - Solenoid 12 VDC NEC / CEC
F - Solenoid 24 VDC NEC / CEC
J - Solenoid 120 VAC NEC / CEC
N - Solenoid with no Coil
0 - Standard Valve Block (No Solenoid)
S - Cycle Sensing on Major Valve

Specialty Code 2 (Blank if no Speciality Code)

E - End of Stroke feedback + Leak Detection
F - End of Stroke feedback
L - Leak Detection
0 - No Option

Special Testing

*For Special Testing options, please contact your nearest **Ingersoll Rand** Customer Service Representative or Distributor.*

NOTICE: All possible options are shown in the chart, however, certain combinations may not be recommended. Consult a representative or the factory if you have questions concerning availability.

OPERATING AND SAFETY PRECAUTIONS

READ, UNDERSTAND AND FOLLOW THIS INFORMATION TO AVOID INJURY AND PROPERTY DAMAGE.

EXCESSIVE AIR PRESSURE
STATIC SPARK

HAZARDOUS MATERIALS
HAZARDOUS PRESSURE

⚠WARNING EXCESSIVE AIR PRESSURE. Can cause personal injury, pump damage or property damage.

- Do not exceed the maximum inlet air pressure as stated on the pump model plate.
- Be sure material hoses and other components are able to withstand fluid pressures developed by this pump. Check all hoses for damage or wear. Be certain dispensing device is clean and in proper working condition.

⚠WARNING STATIC SPARK. Can cause explosion resulting in severe injury or death. Ground pump and pumping system.

- Use the pump grounding screw terminal provided. Use ARO® part no. 66885-1 ground kit or connect a suitable ground wire (12 ga. min.) to a good earth ground source.
- Secure pump, connections and all contact points to avoid vibration and generation of contact or static spark.
- Consult local building codes and electrical codes for specific grounding requirements.
- After grounding, periodically verify continuity of electrical path to ground. Test with an ohmmeter from each component (e.g., hoses, pump, clamps, container, spray gun, etc.) to ground to insure continuity. Ohmmeter should show 0.1 ohms or less.
- Submerse the outlet hose end, dispensing valve or device in the material being dispensed if possible. (Avoid free streaming of material being dispensed.)
- Use hoses incorporating a static wire.
- Use proper ventilation.
- Keep inflammables away from heat, open flames and sparks.
- Keep containers closed when not in use.

⚠WARNING Pump exhaust may contain contaminants. Can cause severe injury. Pipe exhaust away from work area and personnel.

- In the event of a diaphragm rupture, material can be forced out of the air exhaust muffler.
- Pipe the exhaust to a safe remote location when pumping hazardous or inflammable materials.
- Use a grounded 1" minimum ID hose between the pump and the muffler.

⚠WARNING HAZARDOUS PRESSURE. Can result in serious injury or property damage. Do not service or clean pump, hoses or dispensing valve while the system is pressurized.

- Disconnect air supply line and relieve pressure from the system by opening dispensing valve or device and / or carefully and slowly loosening and removing outlet hose or piping from pump.

⚠WARNING HAZARDOUS MATERIALS. Can cause serious injury or property damage. Do not attempt to return a pump to the factory or service center that contains hazardous material. Safe handling practices must comply with local and national laws and safety code requirements.

- Obtain Material Safety Data Sheets on all materials from the supplier for proper handling instructions.

⚠WARNING EXPLOSION HAZARD. Models containing aluminum parts cannot be used with 1,1,1-trichloroethane, methylene chloride or other halogenated hydrocarbon solvents which may react and explode.

- Check pump motor section, fluid caps, manifolds and all wetted parts to assure compatibility before using with solvents of this type.

⚠WARNING MISAPPLICATION HAZARD. Do not use models containing aluminum wetted parts with food products for human consumption. Plated parts can contain trace amounts of lead.

⚠ CAUTION Verify the chemical compatibility of the pump wetted parts and the substance being pumped, flushed or recirculated. Chemical compatibility may change with temperature and concentration of the chemical(s) within the substances being pumped, flushed or circulated. For specific fluid compatibility, consult the chemical manufacturer.

⚠ CAUTION Maximum temperatures are based on mechanical stress only. Certain chemicals will significantly reduce maximum safe operating temperature. Consult the chemical manufacturer for chemical compatibility and temperature limits. Refer to PUMP DATA on page 1 of this manual.

⚠ CAUTION Be certain all operators of this equipment have been trained for safe working practices, understand it's limitations, and wear safety goggles / equipment when required.

⚠ CAUTION Do not use the pump for the structural support of the piping system. Be certain the system components are properly supported to prevent stress on the pump parts.

- Suction and discharge connections should be flexible connections (such as hose), not rigid piped, and should be compatible with the substance being pumped.

⚠ CAUTION Prevent unnecessary damage to the pump. Do not allow pump to operate when out of material for long periods of time.

- Disconnect air line from pump when system sits idle for long periods of time.

⚠ CAUTION Use only genuine ARO replacement parts to assure compatible pressure rating and longest service life.

NOTICE Replacement warning labels are available upon request: "Static Spark & Diaphragm Rupture" pn \ 94080.

⚠WARNING	= Hazards or unsafe practices which could result in severe personal injury, death or substantial property damage.
⚠ CAUTION	= Hazards or unsafe practices which could result in minor personal injury, product or property damage.
NOTICE	= Important installation, operation or maintenance information.

GENERAL DESCRIPTION

The ARO diaphragm pump offers high volume delivery even at low air pressure and a broad range of material compatibility options are available. Refer to the model and option chart. ARO pumps feature stall resistant design, modular air motor / fluid sections.

Air operated double diaphragm pumps utilize a pressure differential in the air chambers to alternately create suction and a positive fluid pressure in the fluid chambers, valve checks insure a positive flow of fluid.

Pump cycling will begin as air pressure is applied and will continue to pump and keep up with the demand. It will build and maintain line pressure and will stop cycling once maximum line pressure is reached (dispensing device closed) and will resume pumping as needed.

AIR AND LUBE REQUIREMENTS

⚠WARNING EXCESSIVE AIR PRESSURE. Can cause pump damage, personal injury or property damage.

- A filter capable of filtering out particles larger than 50 microns should be used on the air supply. There is no lubrication required other than the "O" ring lubricant which is applied during assembly or repair.
- If lubricated air is present, make sure that it is compatible with the "O" rings and seals in the air motor section of the pump.

OPERATING INSTRUCTIONS

- Always flush the pump with a solvent compatible with the material being pumped if the material being pumped is subject to "setting up" when not in use for a period of time.
- Disconnect the air supply from the pump if it is to be inactive for a few hours.
- The outlet material volume is governed not only by the air supply, but also by the material supply available at the inlet. The material supply tubing should not be too small or restrictive. Be sure not to use hose which might collapse.
- When the diaphragm pump is used in a forced-feed (flooded inlet) situation, it is recommended that a "check valve" be installed at the air inlet.
- Secure the diaphragm pump legs to a suitable surface to insure against damage by vibration.

MAINTENANCE

Refer to the part views and descriptions as provided on pages 5 through 8 for parts identification and service kit information.

- Certain ARO "Smart Parts" are indicated which should be available for fast repair and reduction of down time.
- Service kits are divided to service two separate diaphragm pump functions: 1. AIR SECTION, 2. FLUID SECTION. The Fluid Section is divided further to match typical part Material Options.
- Provide a clean work surface to protect sensitive internal moving parts from contamination from dirt and foreign matter during service disassembly and reassembly.
- Keep good records of service activity and include the pump in preventive maintenance program.
- Before disassembling, empty captured material in the outlet manifold by turning the pump upside down to drain material from the pump.

FLUID SECTION DISASSEMBLY

1. Remove (61) outlet manifold and (60) inlet manifold.
2. Remove (22) balls, (19) "O" rings (if applicable) and (21) seats.
3. Remove (15) fluid caps.

NOTE: Only PTFE diaphragm models use a primary diaphragm (7) and a backup diaphragm (8). Refer to the auxiliary view in the Fluid Section illustration.

4. Remove the (14) screw, (6) diaphragm washer, (7) or (7 / 8) diaphragms, (5) backup washer and (196) cushion.

NOTE: Do not scratch or mar the surface of (1) diaphragm rod.

FLUID SECTION REASSEMBLY

SERVICE NOTE: ARO pn 204214-T diaphragm assembly tool is recommended for use when reassembling the pump.

- Reassemble in reverse order. Refer to the torque requirements on page 6.
- Clean and inspect all parts. Replace worn or damaged parts with new parts as required.
- Lubricate (1) diaphragm rod and (144) "U" cups with Lubriplate® FML-2 grease (94276 grease packet is included in service kit).
- Be certain the diaphragm assembly bottoms out on the (1) rod, back off PTFE diaphragm assembly far enough to align holes.
- For models with PTFE diaphragms: Item (8) Santoprene diaphragm is installed with the side marked "AIR SIDE" towards the pump center body. Install the (7) PTFE diaphragm with the side marked "FLUID SIDE" towards the (15) fluid cap.
- Re-check torque settings after the pump has been re-started and run a while.

• Hytrel® and Viton® are registered trademarks of the DuPont Company • Loctite® is a registered trademark of Henkel Loctite Corporation • Kynar® is a registered trademark of Arkema Inc. • • Santoprene® is a registered trademark of Monsanto Company, licensed to Advanced Elastomer Systems, L.P. • ARO® is a registered trademark of Ingersoll-Rand Company • • Lubriplate® is a registered trademark of Lubriplate Division (Fiske Brothers Refining Company) • 262™, 271™ and 572™ are trademarks of Henkel Loctite Corporation • • Hastelloy® is a registered trademark of Haynes International, Inc. •

PARTS LIST / PX30R-XXX-XXX-CXXX FLUID SECTION

FLUID SECTION SERVICE KITS (637303 -XXX or 637303 -XX)

❶For Fluid Kits With Seats:

637303-XXX Fluid Section Service Kits include: Seats (see SEAT Option, refer to -XXX in chart below), Balls (see BALL Option, refer to -XXX in chart below), Diaphragms (see DIAPHRAGM Option, refer to -XXX in chart below), and items: 3, 19, 70, 144, 175 and 196 (listed below) plus 174 and 94276 Lubriplate FML-2 grease (page 6).

❶ For Fluid Kits Without Seats:

637303-XX Fluid Section Service Kits include: Balls (see BALL Option, refer to -XX in chart below), Diaphragms (see DIAPHRAGM Option, refer to -XX in chart below), and items: 3, 19, 70, 144, 175 and 196 (listed below) plus 174 and 94276 Lubriplate FML-2 grease (page 6).

SEAT OPTIONS PX30R-XXX-XXX-CXXX

❶"21"							
-XXX	Seat	Qty	Mtl	-XXX	Seat	Qty	Mtl
-AXX	94104-A	(4)	[Sp]	-HXX	94114	(4)	[SH]
-CXX	94104-C	(4)	[H]	-KXX	94621-K	(4)	[K]
-EXX	95678	(4)	[C]	-LXX	94939	(4)	[Ha]
-FXX	95674	(4)	[A]	-SXX	94113	(4)	[SS]
-GXX	94104-G	(4)	[B]				

NOTE: Seat options -AXX, -CXX and -GXX do not require item 19 "O" ring.

BALL OPTIONS PX30R-XXX-XXX-CXXX

❶"22" (3-1/4" diameter)				❶"19" (3/16" x 5" OD)		
-XXX	Ball	Qty	Mtl	"O" Ring	Qty	Mtl
-XAX	94103-A	(4)	[Sp]	94115	(4)	[E]
-XCX	94103-C	(4)	[H]	Y327-350	(4)	[V]
-XGX	94103-G	(4)	[B]	Y325-350	(4)	[B]
-XTX	94103-T	(4)	[T]	Y328-350	(4)	[T]
-XVX	94103-V	(4)	[V]	Y327-350	(4)	[V]

DIAPHRAGM OPTIONS PX30R-XXX-XXX-CXXX

-XXX	❶Service Kits With Seats -XXX = (Seat) -XXX = (Ball) -XXX = (Diaphragm)	❶Service kits Without Seats -XX = (Ball) -XX = (Diaphragm)	❶"7"			❶"8"			❶"3" (1/8" x 1" OD)		
			Diaphragm	Qty	Mtl	Diaphragm	Qty	Mtl	"O" Ring	Qty	Mtl
-XXA	637303-XXA	637303-XA	94091-A	(2)	[Sp]	- - - - -	- - -	- - -	Y328-210	(2)	[T]
-XXB	637303-XXB	637303-XB	94110-A	(2)	[Sp]	- - - - -	- - -	- - -	Y328-210	(2)	[T]
-XXC	637303-XXC	637303-XC	94091-C	(2)	[H]	- - - - -	- - -	- - -	Y327-210	(2)	[V]
-XXG	637303-XXG	637303-XG	96016-2	(2)	[B]	- - - - -	- - -	- - -	Y328-210	(2)	[T]
-XXL	637303-XXL	637303-XL	94090-L	(2)	[L]	94110-A	(2)	[Sp]	Y328-210	(2)	[T]
-XXT	637303-XXT	637303-XT	94090-T	(2)	[T]	94110-A	(2)	[Sp]	Y328-210	(2)	[T]
-XXV	637303-XXV	637303-XV	95345	(2)	[V]	- - - - -	- - -	- - -	Y327-210	(2)	[V]

MATERIAL CODE

[A] = Aluminum
[B] = Nitrile
[C] = Carbon Steel
[Co] = Copper
[CI] = Cast Iron
[E] = E.P.R.
[H] = Hytrel
[Ha] = Hastelloy - C
[K] = Kynar PVDF
[L] = Long Life PTFE
[SH] = Hard Stainless Steel
[Sp] = Santoprene
[SS] = Stainless Steel
[T] = PTFE
[V] = Viton

MANIFOLD THREAD / FLUID CAP MATERIAL OPTIONS PX30R-XXX-XXX-CXXX

			Cast Iron				Stainless Steel							
			PX30R-ACX-XXX-C NPTF		PX30R-BCX-XXX-C BSP		PX30R-ASX-XXX-C NPTF		PX30R-BSX-XXX-C BSP		PX30X-DSX-XXX-C		PX30R-FSX-XXX-C	
Item	Description (size)	Qty	Part No.	Mtl	Part No.	Mtl	Part No.	Mtl	Part No.	Mtl	Part No.	Mtl	Part No.	Mtl
15	Fluid Cap	(2)	94106	[CI]	94106	[CI]	94107	[SS]	94107	[SS]	94107	[SS]	94107	[SS]
60	Inlet Manifold	(1)	97215 -1	[CI]	97215 -2	[CI]	97212-1	[SS]	97212-2	[SS]	97416	[SS]	97213	[SS]
61	Outlet Manifold	(1)	94702-1	[CI]	94702-2	[CI]	94704-1	[SS]	94704-2	[SS]	97417	[SS]	96784	[SS]

EXTERNAL HARDWARE OPTION PX30R-XXX-XXX-CXXX

			PX30R-XXP-XXX-C		PX30R-XXS-XXX-C	
Item	Description (size)	Qty	Part No.	Mtl	Part No.	Mtl
26	Screw (M12 x 1.75 - 6g x 45 mm)	(12)	94412-1	[C]	94412-2	[SS]
27	Screw (M12 x 1.75 - 6g x 60 mm)	(16)	94991-1	[C]	94991	[SS]
29	Nut (M12 x 1.75 - 6h)	(16)	95053-1	[C]	95053	[SS]

COMMON PARTS

Item	Description (size)	Qty	Part No.	Mtl
❸ 1	Rod	(1)	97387	[C]
5	Backup Washer	(2)	94831-2	[SS]
6	Fluid Side Washer	(2)	94803	[SS]
9	Washer (3/16" ID x 2" OD x 5/32")	(2)	Y13-12-T	[SS]
14	Cap Screw (3/4" - 16 x 3-1/4")	(2)	Y5-134-T	[SS]
68	Air Cap	(1)	94031-1	[SS]
69	Air Cap	(1)	94031-2	[SS]
❶❷ 70	Gasket	(2)	94100	[B]

Item	Description (size)	Qty	Part No.	Mtl
74	Pipe Plug (1/4 - 18 N.P.T. x 7/16")	(2)	Y17-51-S	[SS]
126	Plug	(1)	93897-1	[SS]
131	Screw (M10 x 1.5 - 6g x 120 mm)	(4)	96656	[SS]
❶❷ 144	"U" Cup (3/16" x 1-3/8" OD)	(2)	Y186-51	[B]
❶❷ 175	"O" Ring (3/32" x 1" OD)	(2)	Y325-117	[B]
❷ 180	Gasket (0.406" ID x 0.031" thick)	(4)	94098	[Co]
181	Roll Pin (5/32" OD x 3/4" long)	(4)	Y178-56-S	[SS]
❶196	Cushion	(2)	94631	[Sp]

❷ Air motor kit parts, see pages 7 and 8.
❸ "Smart Parts", keep these items on hand in addition to the service kits for fast repair and reduction of down time.

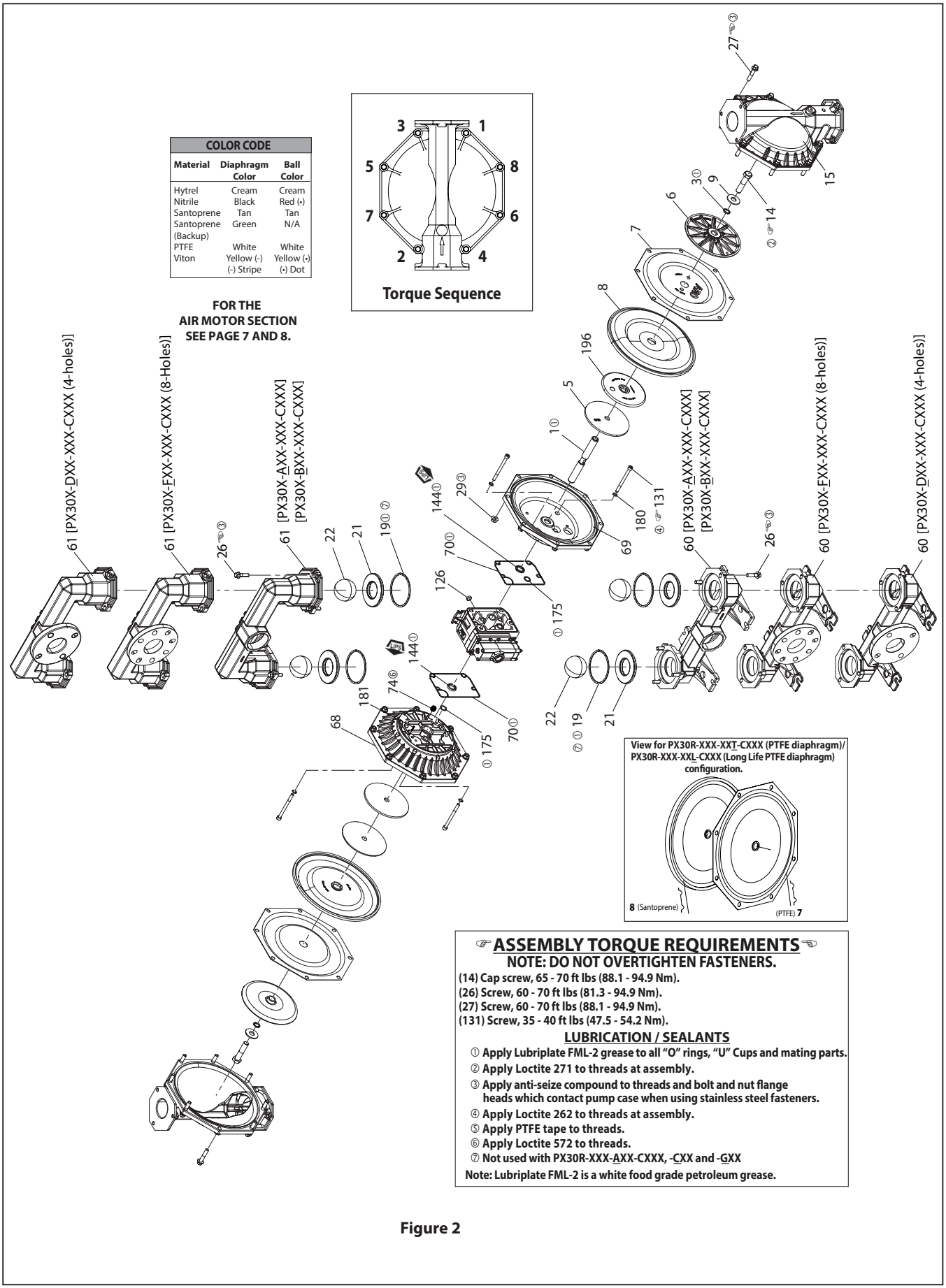
COLOR CODE
Material | Diaphragm Color | Ball Color
Hytrel | Cream | Cream
Nitrile | Black | Red (•)
Santoprene | Tan | Tan
Santoprene (Backup) | Green | N/A
PTFE | White | White
Viton | Yellow (-) (-) Stripe | Yellow (•) (•) Dot
FOR THE AIR MOTOR SECTION SEE PAGE 7 AND 8.
Torque Sequence
View for PX30R-XXX-XXT-CXXX (PTFE diaphragm)/ PX30R-XXX-XXL-CXXX (Long Life PTFE diaphragm) configuration.
8 (Santoprene)
(PTFE) 7
ASSEMBLY TORQUE REQUIREMENTS
NOTE: DO NOT OVERTIGHTEN FASTENERS.
(14) Cap screw, 65 - 70 ft lbs (88.1 - 94.9 Nm).
(26) Screw, 60 - 70 ft lbs (81.3 - 94.9 Nm).
(27) Screw, 60 - 70 ft lbs (88.1 - 94.9 Nm).
(131) Screw, 35 - 40 ft lbs (47.5 - 54.2 Nm).
LUBRICATION / SEALANTS
① Apply Lubriplate FML-2 grease to all "O" rings, "U" Cups and mating parts.
② Apply Loctite 271 to threads at assembly.
③ Apply anti-seize compound to threads and bolt and nut flange heads which contact pump case when using stainless steel fasteners.
④ Apply Loctite 262 to threads at assembly.
⑤ Apply PTFE tape to threads.
⑥ Apply Loctite 572 to threads.
⑦ Not used with PX30R-XXX-AXX-CXXX, -CXX and -GXX
Note: Lubriplate FML-2 is a white food grade petroleum grease.

Figure 2

PARTS LIST / PX30R-XXX-XXX-CXXX AIR MOTOR SECTION

❷ Indicates parts included in 637369 air section service kit shown below and items (70), (144), (175) and (180) shown on page 5.

AIR MOTOR PARTS

Item	Description (size)	Qty	Part No.	Mtl
101	Center Body	(1)	97037	[P]
103	Bushing	(1)	97394	[D]
105	Screw (M6 x 1 - 6g x 180 mm)	(4)	95921	[SS]
107	End Plate	(2)	95846	[SS]
111	Spool	(1)	95651	[D]
118	Actuator Pin (0.250" x 2.276" long)	(2)	94083	[SS]
121	Sleeve	(2)	94084	[D]
127	90° St. Elbow (1-1/2 - 11-1/2 N.P.T.)	(1)	94860	[C / I]
❷ 132	Gasket	(1)	94099	[B]
133	Washer (M6)	(8)	95931	[SS]
134	Screw (M6 x 1 - 6g x 35 mm)	(8)	95923	[SS]
135	Valve Block (PD30R-XXX-XXX-CXXX)	(1)	95789	[P]
136	End Cap	(1)	95790	[P]
❷ 137	"O" Ring (1/16" x 2" OD)	(1)	Y325-32	[B]
❷ 138	"U" Cup (3/16" x 1.792" OD)	(1)	95966	[B]
❷ 139	"U" Cup (3/16" x 1-1/4" OD)	(1)	Y186-50	[B]
140	Valve Insert	(1)	95650	[Ck]
141	Valve Plate	(1)	95659	[Ck]
❷ 166	Track Gasket	(1)	94026	[B]
❷ 167	Pilot Piston (includes 168 and 169)	(1)	67164	[D]
168	"O" Ring (3/32" x 5/8" OD)	(2)	94433	[U]
169	"U" Cup (1/8" x 7/8" OD)	(1)	Y240-9	[B]
170	Piston Sleeve	(1)	94081	[D]
❷ 171	"O" Ring (3/32" x 1-1/8" OD)	(1)	Y325-119	[B]
❷ 172	"O" Ring (1/16" x 1-1/8" OD)	(1)	Y325-22	[B]
❷ 173	"O" Ring (1/16" x 1-3/8" OD)	(2)	Y325-26	[B]
❶❷ 174	"O" Ring (1/8" x 1/2" OD)	(2)	Y325-202	[B]
❷ 176	Diaphragm (check valve)	(2)	94102	[Sp]
❷ 199	Track Gasket	(1)	95666	[B]
❷ 200	Gasket	(1)	95665	[B]
201	Muffler Kit (includes item 127)	(1)	67213	
❷ 232	"O" Ring (1/8" x 1/2" OD)	(2)	Y325-202	[B]
233	Adapter Plate	(1)	95761	[P]
236	Nut (M6 x 1 - 6h)	(4)	95924	[SS]
❷ 243	"O" Ring (1/8" x 5/8" OD)	(1)	Y325-204	[B]
❷ 244	"O" Ring (1/8" x 7/8" OD)	(1)	Y325-208	[B]
❶ ❷	Lubriplate FML-2 grease	(1)	94276	
	Lubriplate Grease Packets (10)		637308	

❶ Items included in fluid section service kit, see pages 5 and 6.

MATERIAL CODE

[B] = Nitrile
[Br] = Brass
[C] = Carbon Steel
[Ck] = Ceramic
[D] = Acetal
[I] = Iron
[P] = Polypropylene
[Sp] = Santoprene
[SS] = Stainless Steel
[U] = Polyurethane

AIR MOTOR SECTION SERVICE

Service is divided into two parts - 1. Pilot Valve, 2. Major Valve.
GENERAL REASSEMBLY NOTES:

- Air Motor Section service is continued from Fluid Section repair.
- Inspect and replace old parts with new parts as necessary. Look for deep scratches on metallic surfaces, and nicks or cuts in "O" rings.
- Take precautions to prevent cutting "O" rings upon installation.
- Lubricate "O" rings with Lubriplate FML-2 grease.
- Do not over-tighten fasteners. Refer to torque specification block on view.
- Re-torque fasteners following restart.
- SERVICE TOOLS - To aid in the installation of (168) "O" rings onto the (167) pilot piston, use tool # 204130-T, available from ARO.

PILOT VALVE DISASSEMBLY

1. A light tap on (118) actuator pin should expose the opposite (121) sleeve, (167) pilot piston and other parts.
2. Remove (170) sleeve. Inspect inner bore of sleeve for damage.

PILOT VALVE REASSEMBLY

1. Clean and lubricate parts not being replaced from service kit.
2. Install new (171 and 172) "O" rings. Replace (170) sleeve.
3. Install new (168) "O" rings and (169) seal - Note the lip direction. Lubricate and replace (167) pilot piston.
4. Reassemble remaining parts. Replace (173 and 174) "O" rings.

MAJOR VALVE DISASSEMBLY

1. Remove (135) valve block and (233) adapter plate, exposing (132 and 166) gaskets, (232) "O" ring and (176) checks.
2. Remove (233) adapter plate, releasing (140) valve insert, (141) valve plate, (199 and 200) gaskets and (232, 243 and 244) "O" rings.
3. Remove (136) end cap and (137) "O" ring, releasing (111) spool.

MAJOR VALVE REASSEMBLY

1. Install new (138 and 139) "U" cups on (111) spool - **LIPS MUST FACE EACH OTHER.**
2. Insert (111) spool into (135) valve block.
3. Install (137) "O" ring on (136) end cap and assemble end cap to (135) valve block, securing with (107) end plates and (105) screws.
4. Install (140) valve insert and (141) valve plate into (135) valve block. **NOTE:** Assemble (140) valve insert with "dished" side toward (141) valve plate. Assemble (141) valve plate with 2 identification dots toward (199 and 200) gaskets.
5. Assemble (232, 243 and 244) "O" rings, (199 and 200) gaskets and (233) adapter plate to (135) valve block.
6. Assemble (132 and 166) gaskets, (176) checks and (232) "O" ring to (101) center body.
7. Assemble (135) valve block and components to (101) center body, securing with (134) screws.

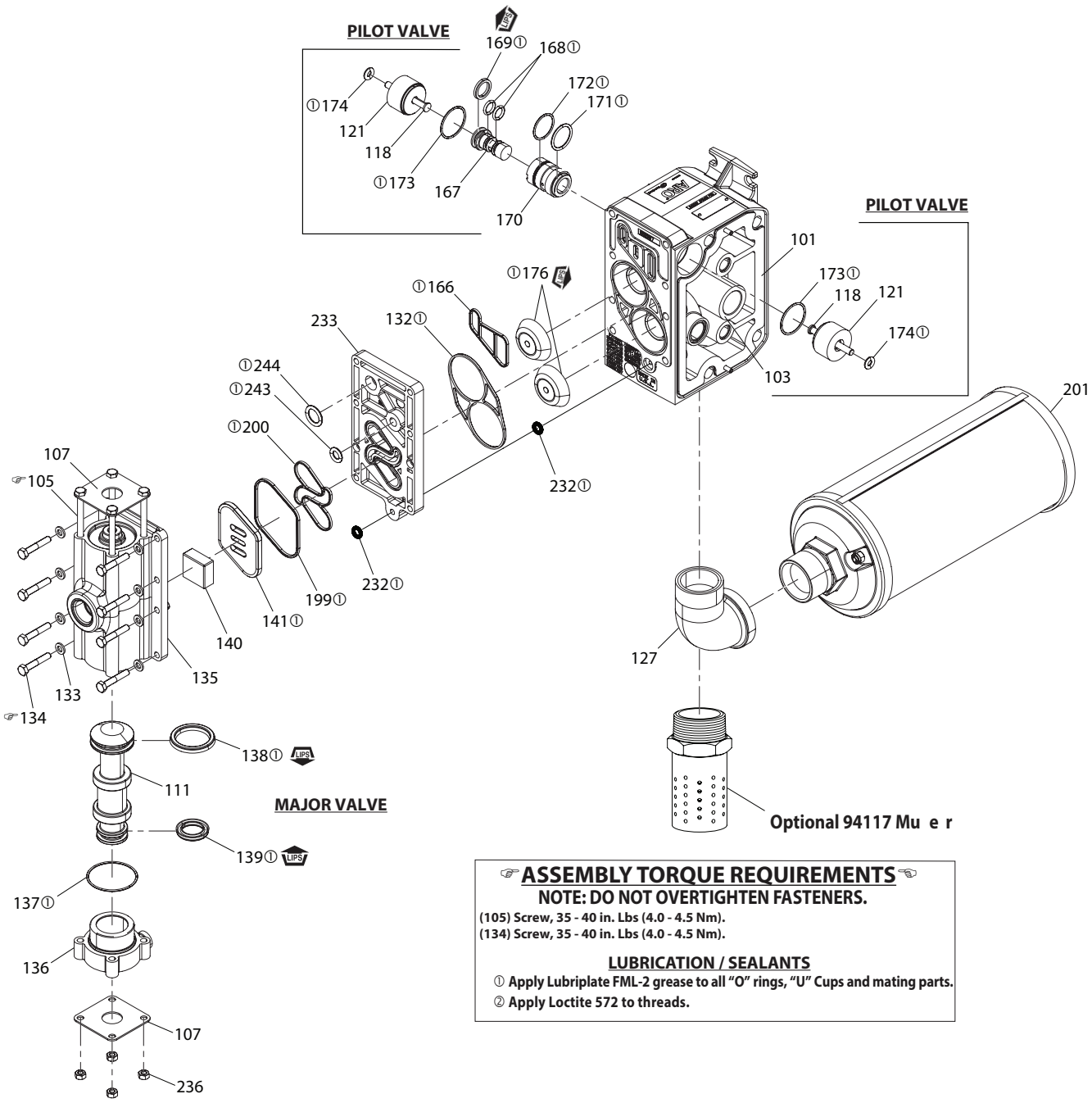

ASSEMBLY TORQUE REQUIREMENTS

NOTE: DO NOT OVERTIGHTEN FASTENERS.

(105) Screw, 35 - 40 in. Lbs (4.0 - 4.5 Nm).
(134) Screw, 35 - 40 in. Lbs (4.0 - 4.5 Nm).

LUBRICATION / SEALANTS

① **Apply Lubriplate FML-2 grease to all "O" rings, "U" Cups and mating parts.**
② **Apply Loctite 572 to threads.**

A replacement major valve service assembly is available separately, which includes the following:

637374 for models PD30R-XXX-XXX-CXXX: 105 (4), 107 (2), 111, 132, 135, 136, 137, 138, 139, 140, 141, 166, 176 (2), 199, 200, 232 (2), 233, 236 (4), 243 and 244.

637374-1 for models PE30R-XXX-XXX-CXXX: 76, 105 (4), 107 (2), 111, 132, 135, 136, 137, 138, 139, 140, 141, 166, 176 (2), 199, 200, 232 (2), 233, 236 (4), 243 and 244.

Figure 3

TROUBLESHOOTING

Product discharged from exhaust outlet.
- Check for diaphragm rupture.
- Check tightness of (14) cap screw.

Air bubbles in product discharge.
- Check connections of suction plumbing.
- Check "O" rings between intake manifold and fluid caps.
- Check tightness of (14) cap screw.

Motor blows air or stalls.
- Check (176) check valve for damage or wear.
- Check for restrictions in valve / exhaust.

Low output volume, erratic flow or no flow.
- Check air supply.
- Check for plugged outlet hose.
- Check for kinked (restrictive) outlet material hose.
- Check for kinked (restrictive) or collapsed inlet material hose.
- Check for pump cavitation - suction pipe should be sized at least as large as the inlet thread diameter of the pump for proper flow if high viscosity fluids are being pumped. Suction hose must be a non-collapsing type, capable of pulling a high volume.
- Check all joints on the inlet manifolds and suction connections. These must be air tight.
- Inspect the pump for solid objects lodged in the diaphragm chamber or the seat area.

DIMENSIONAL DATA

Dimensions shown are for reference only, they are displayed in inches and millimeters (mm).

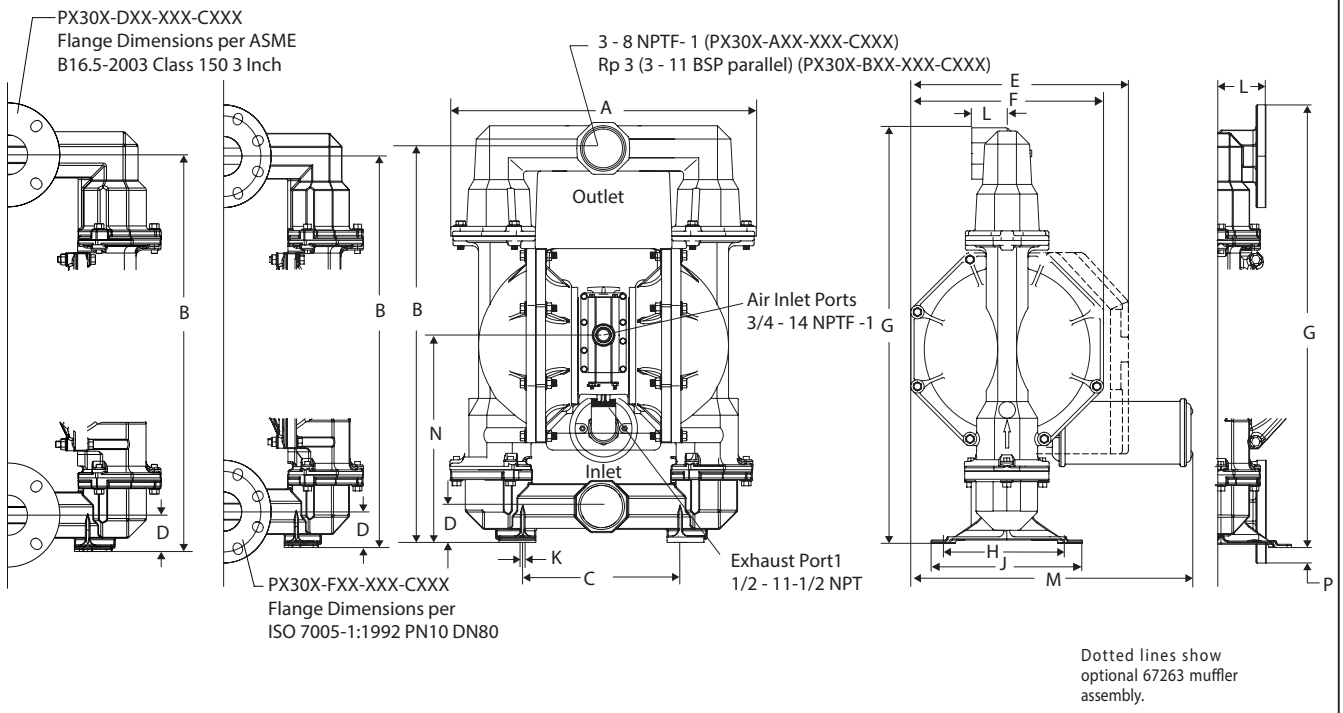

Figure 4

DIMENSIONS

A - see below
B - 30" (762.0 mm)
C - 12-1/16" (306.4 mm)
D - see below
E - 17-11/16" (449.2 mm)
F - 15" (381.0 mm)
G - 32" (812.8 mm)
H - 10-5/32" (258.0 mm)
J - see below
K - 9/16" (14.3 mm)
L - see below
M - 23-3/32" (586.3 mm)
N - see below
P - 1-3/16" (30.2mm)

	"A"	"D"	"J"	"N"	"L"	"G"
PX30X-XCX-XXX-CXXX	23-5/8" (600.1 mm)	2-7/16" (61.9 mm)	11-11/16" (296.9 mm)	15-1/2" (393.7 mm)	2-3/4" (69.9 mm)	32" (812.8 mm)
PX30X-XSX-XXX-CXXX	23-1/8" (587.4 mm)	2-3/4" (69.9 mm)	11-11/16" (296.9 mm)	16" (406.4 mm)	2-3/4" (69.9 mm)	32" (812.8 mm)
PX30X-DXX-XXX-CXXX	23-1/8" (587.4 mm)	2-3/4" (69.9 mm)	11-11/16" (296.9 mm)	16" (406.4 mm)	3-3/4" (95.25 mm)	33-15/16"(862.0 mm)
PX30X-FXX-XXX-CXXX	23-1/8" (587.4 mm)	2-3/4" (69.9 mm)	11-11/16" (296.9 mm)	16" (406.4 mm)	3-3/4" (95.25 mm)	33-15/16"(862.0 mm)